1. * TOL. NOT TO VARY MORE THAN .004 TOTAL IN INDIVIDUAL SHEAVE.
2. PAINT GRAY EXCEPT BORE AND TAPPED HOLES.
3. SUPERSEDES DRAWING NO. 30852-S.

PATTERN-RING	SET MACHINE	ARM	WEB	HUB	OUTSIDE LINING	FLASK	JIG NO.
5.6-B-3-SF	C D		C D	C D	C D		SF

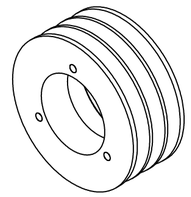

STAMP ON THIS SIDE
MAX RPM 4200
5.6X3LB-SF
DATE CODE

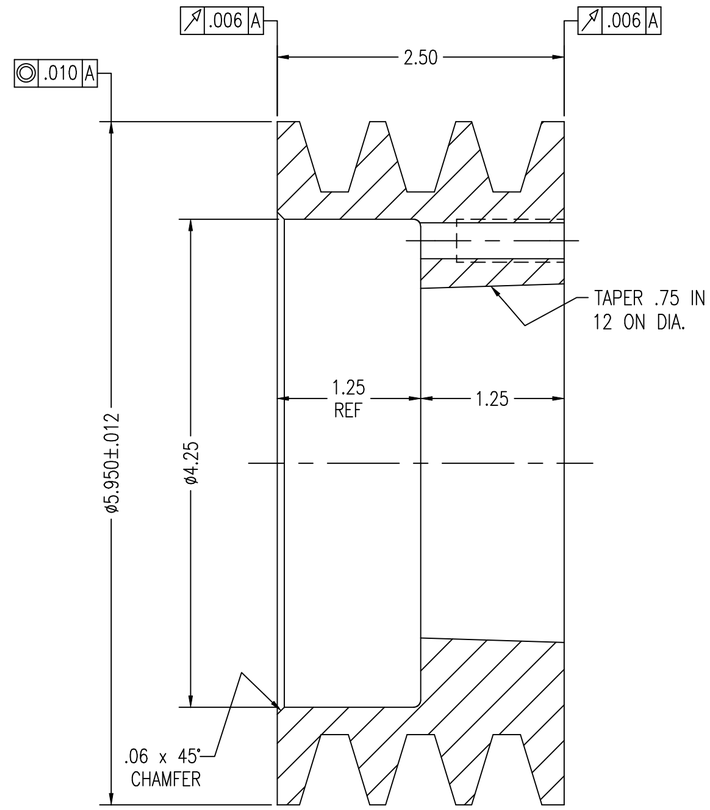

SECTION A-A

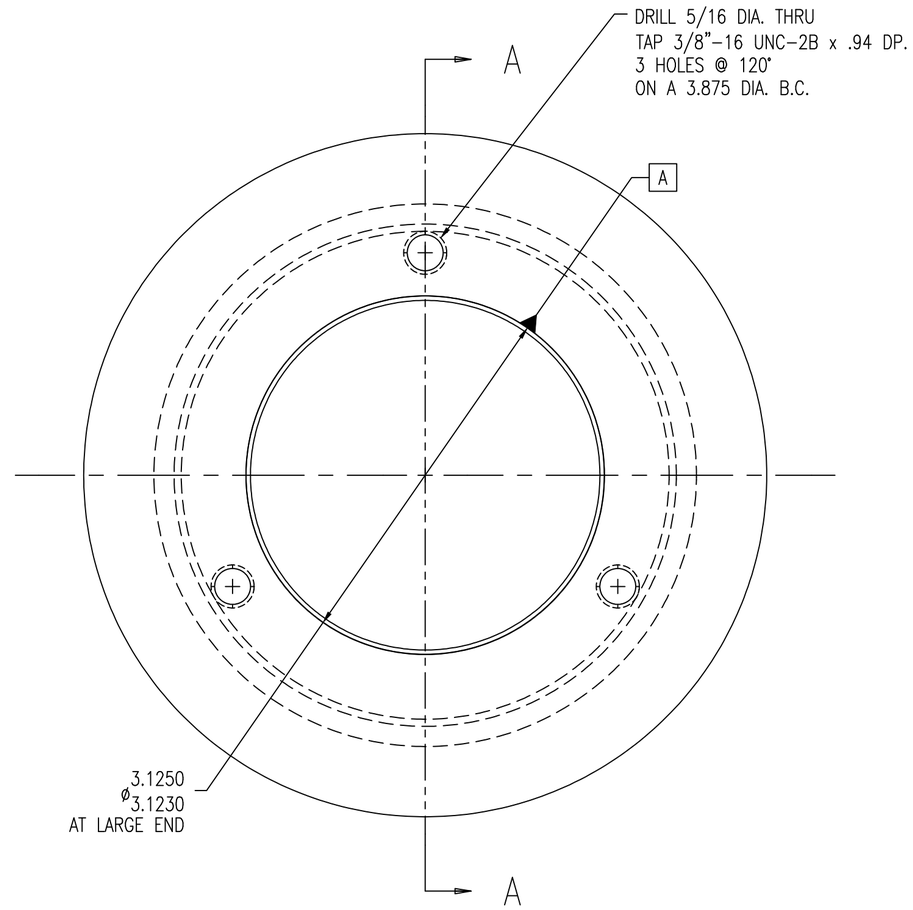

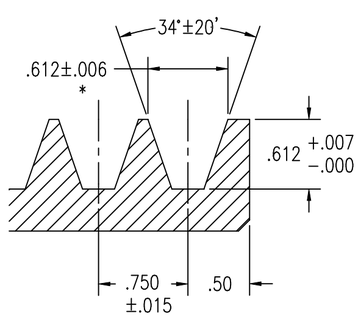

3 STD B GROOVES
NOT TO SCALE

CAST IRON - CLASS 30
1 PLANE BALANCE WITHIN .41 oz. in.
FINISH ALL OVER - BALANCE OPERATION NOT REQ'D

ITEM	DESCRIPTION	P/N	QTY
1	3/8"-16 UNC x 1.25" LG. HEX CAPSCREW	H181	3

FINISH AND TOLERANCES UNLESS OTHERWISE SPECIFIED

√= 250 MICRO INCH

STRAIGHT BORES, SYNCHRONOUS TEETH AND V-BELT GROOVE SIDEWALLS 125 MICRO INCH

DECIMAL	MACHINED	CASTING
UP TO 12" .X .XX	= ±.03	±.06
OVER 12" .X .XX	= ±.06	±.09
.XXX	= ±.005	
ANGULAR	±.0°30'	

REMOVE ALL BURRS AND BREAK ALL SHARP CORNERS UNLESS OTHERWISE SPECIFIED

	REVISIONS	ECN NO.	BY	CKD BY	DATE
F					
E					
D					
C					
B					
A	REDRAWN/DRILL DEPTH WAS 1.19	7016	CNG	WKC	10-28-03

THIRD ANGLE PROJECTION

TB WOOD'S INCORPORATED
MECHANICAL DIVISION

CUSTOMER:	
CUST. NO.:	
DRAWN: CNG	DATE: 10-28-03
APPROVED: WKC	DATE: 10-28-03
SHEET: 1 OF 1	SCALE: 1/1

DESCRIPTION:	5.6X3LB-SF (SPEC)
LIBRARY:	Sheave_B
WR2-LBS. FT² .28	PART NO.: 563LB
FINISH WT.-LBS. 7.5	DRAWING NUMBER 40874-2
REV. LEVEL	A